1511201 - Charging pole SL2A

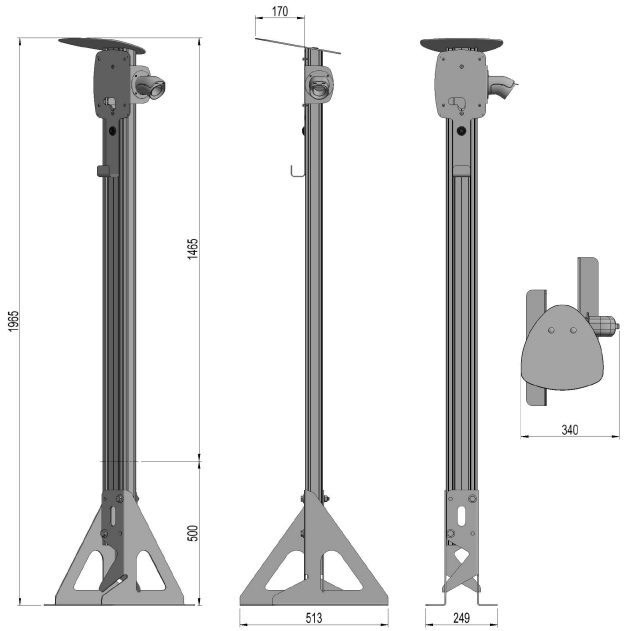

Description	Charging pole for EV charger with anchor for ground fundation. Mounting plate for Easee Home / Charge, Zaptec Go and Amina 1. Hook for cable and holder for charging connector.
Unit	PSC
Weight	10,8 kg
Material	Aluminium, anodised-brown
Fastening method	Anchor for ground fundation

Sales and development, Trondhei
Østre Rosten 84G
7075 Tiller
Phone: 976 74 000
Email: info@el-tjeneste.no

Factory and warehouse, Steinkje
Jæktsmedgata 4
7725 Steinkjer
Phone: 976 74 000
Email: info@el-tjeneste.no

www.el-tjeneste.no