2836372 - Module plate NSO-230IT-M

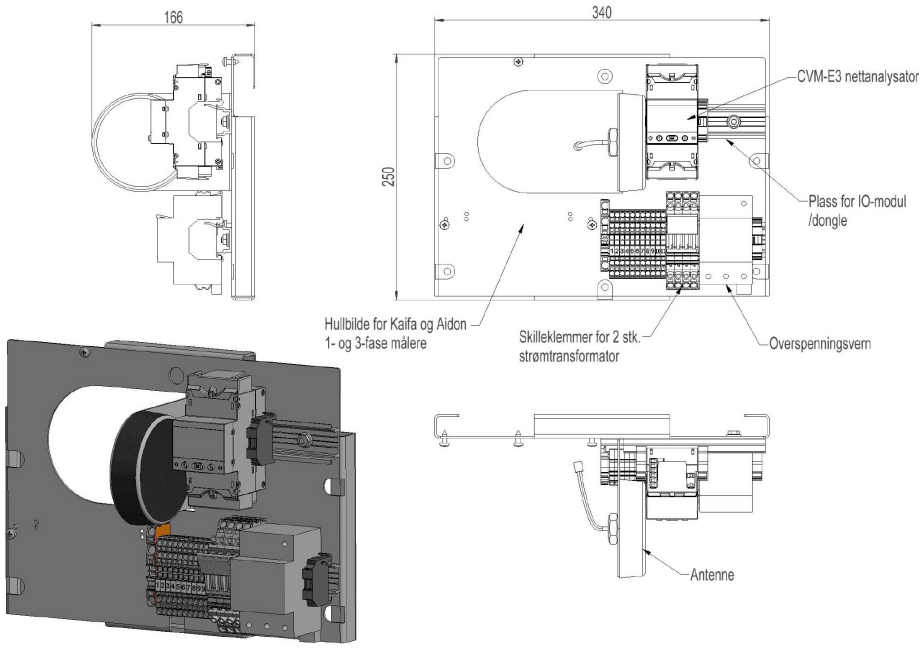

Description	Module plate for grid monitoring of 230V IT-grid. With power analyser, prepared for MBUS dongle. For installation inside transformer substations. Adapted to Kaifa smart meters.
Unit	PSC
Weight	2 kg
Material	Aluminium
Voltage/System configuration	230V IT
Fastening method	Wall
Output antenna	MCX-m

Sales and development, Trondhei
Østre Rosten 84G
7075 Tiller
Phone: 976 74 000
Email: info@el-tjeneste.no

Factory and warehouse, Steinkje
Jæktsmedgata 4
7725 Steinkjer
Phone: 976 74 000
Email: info@el-tjeneste.no

www.el-tjeneste.no