2836478 - Washer SA196D

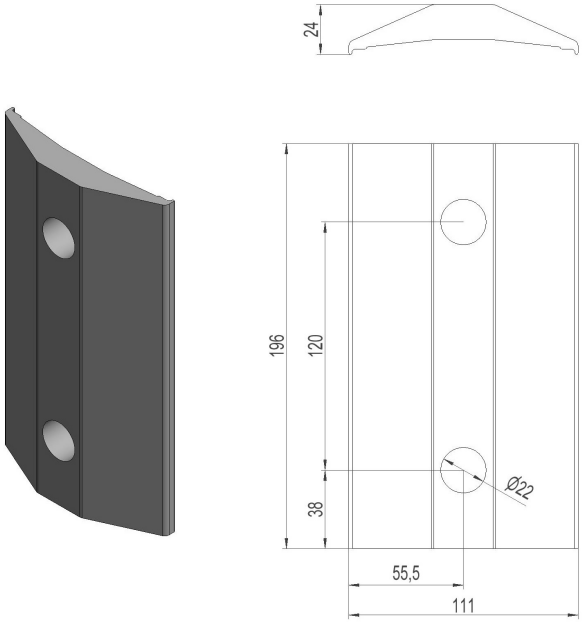

Description	Washer length 196mm. Hole 2xØ22mm. Important: always to be used to the crossbar together with pole clamp.
Unit	PSC
Weight	0,2 kg
Material	Aluminium, anodised-brown

Sales and development, Trondhei

Østre Rosten 84G
7075 Tiller
Phone: 976 74 000
Email: info@el-tjeneste.no

www.el-tjeneste.no

Factory and warehouse, Steinkje

Jæktsmedgata 4
7725 Steinkjer
Phone: 976 74 000
Email: info@el-tjeneste.no