2836684 - Anch. crossbar TF2525D-34-7S	
Cross arm type	H/A-pole
Pole distance	2,5m
Phase distance	2,5m
Pole fastening	340mm-double pole clamp

Crossbar profile P7 (laying)

Weight: (kg/m)	22.225
Cross section: (mm2)	8243
Material:	Extruded aluminum, brown anodized
Alloy:	AlMgSi 6082-T6
Moment of resistance: (mm3)	Wx= 345 747 Wy= 550 278
Area moment of inertia: (mm4)	Ix= 28 524 112 Iy= 67 111 384
Center distance for Ix: (mm)	Cx= 82,50
Center distance for Iy: (mm)	Cy= 121,96
Minimum yield strength 0,2: (N/mm2)	250
Minimum breaking load: (N/mm2)	290

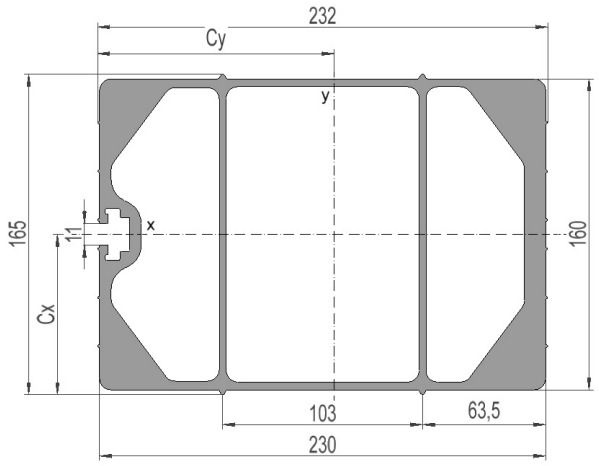

Sales and development, Trondhei
Østre Rosten 84G
7075 Tiller
Phone: 976 74 000
Email: info@el-tjeneste.no

Factory and warehouse, Steinkje
Jæktsmedgata 4
7725 Steinkjer
Phone: 976 74 000
Email: info@el-tjeneste.no

www.el-tjeneste.no

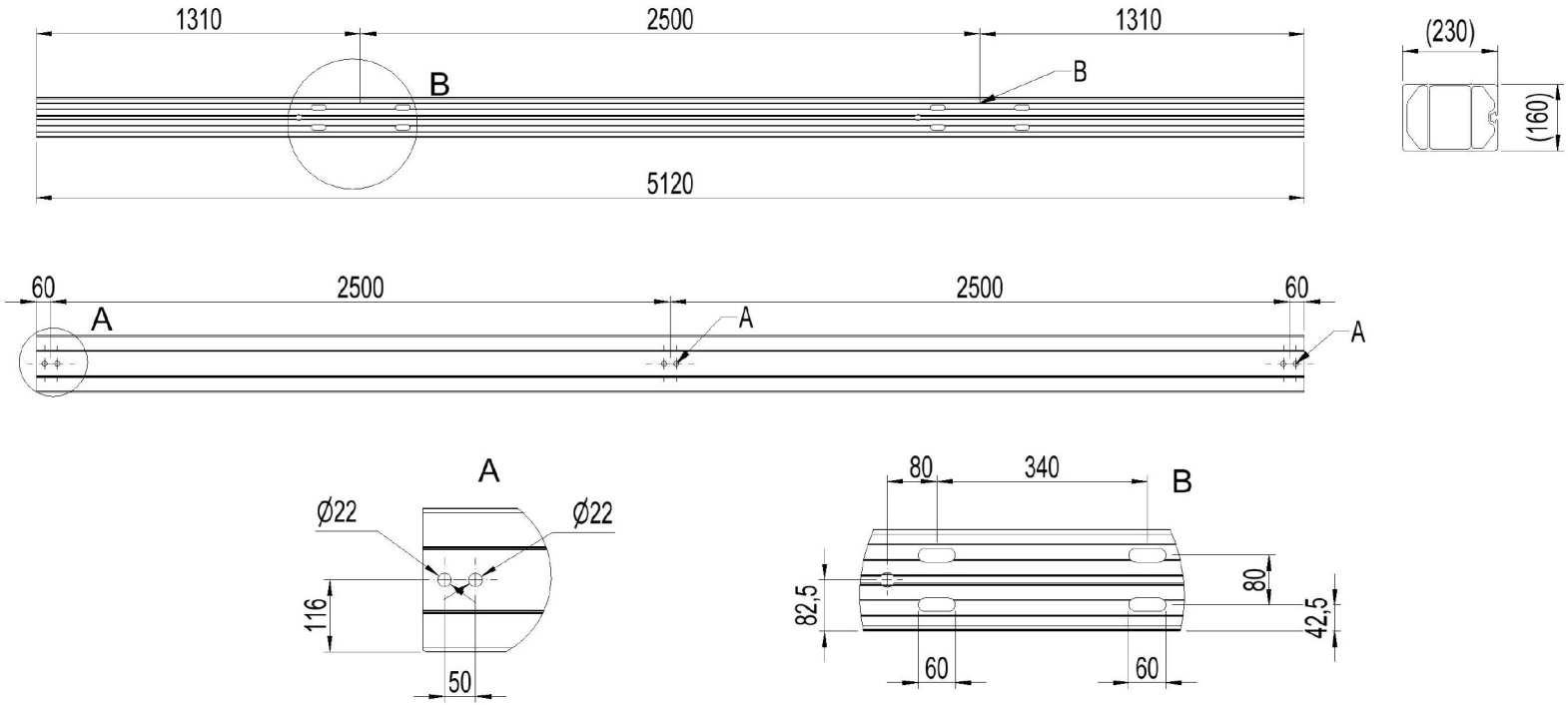

Sales and development, Trondhei

Østre Rosten 84G
7075 Tiller
Phone: 976 74 000
Email: info@el-tjeneste.no

www.el-tjeneste.no

Factory and warehouse, Steinkje

Jæktsmedgata 4
7725 Steinkjer
Phone: 976 74 000
Email: info@el-tjeneste.no

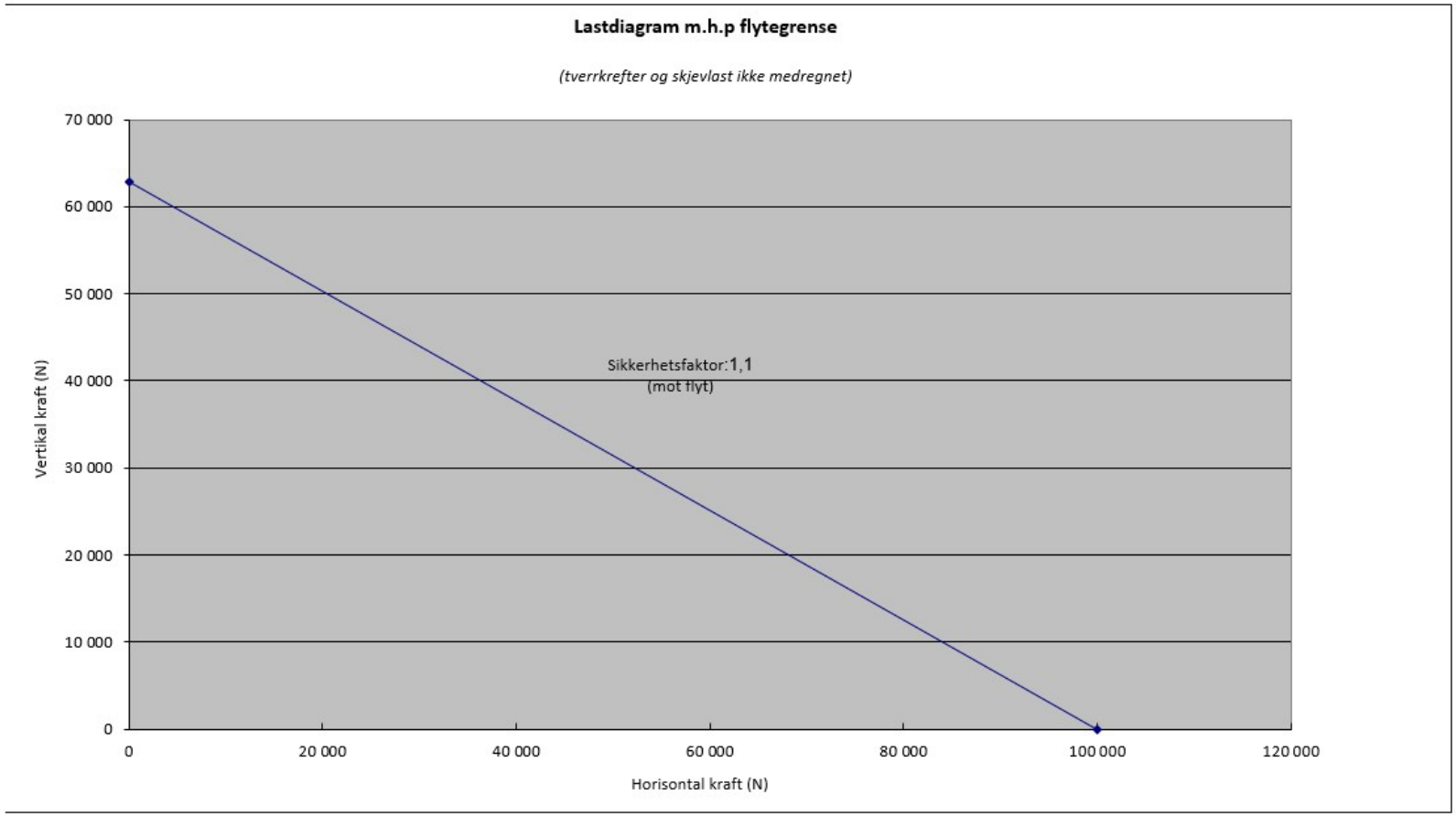

Sales and development, Trondhei
Østre Rosten 84G
7075 Tiller
Phone: 976 74 000
Email: info@el-tjeneste.no

www.el-tjeneste.no

Factory and warehouse, Steinkje
Jæktsmedgata 4
7725 Steinkjer
Phone: 976 74 000
Email: info@el-tjeneste.no