DATASHEET

2836770 - T5050D-6S

EL-tjeneste as
Norwegian quality and innovation

2836770 - Load-bearing crossbar T5050D-6S	
Cross arm type	H/A-pole
Pole distance	5m
Phase distance	5m
Pole fastening	280mm-double pole clamp

Crossbar profile P6 (standing)

Weight: (kg/m)	10.52
Cross section: (mm2)	3897
Material:	Extruded aluminum, brown anodized
Alloy:	AlMgSi 6082-T6
Moment of resistance: (mm3)	Wx= 233 884 Wy= 87 555
Area moment of inertia: (mm4)	Ix= 28 325 925 Iy= 3 852 424
Center distance for Ix: (mm)	Cx= 121,11
Center distance for Iy: (mm)	Cy= 44,00
Minimum yield strength 0,2: (N/mm2)	250
Minimum breaking load: (N/mm2)	290

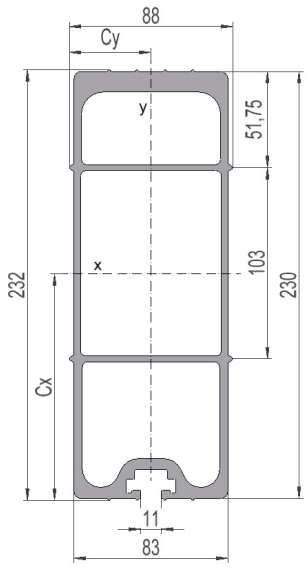

Sales and development, Trondhei
Østre Rosten 84G
7075 Tiller
Phone: 976 74 000
Email: info@el-tjeneste.no

Factory and warehouse, Steinkje
Jæktsmedgata 4
7725 Steinkjer
Phone: 976 74 000
Email: info@el-tjeneste.no

www.el-tjeneste.no

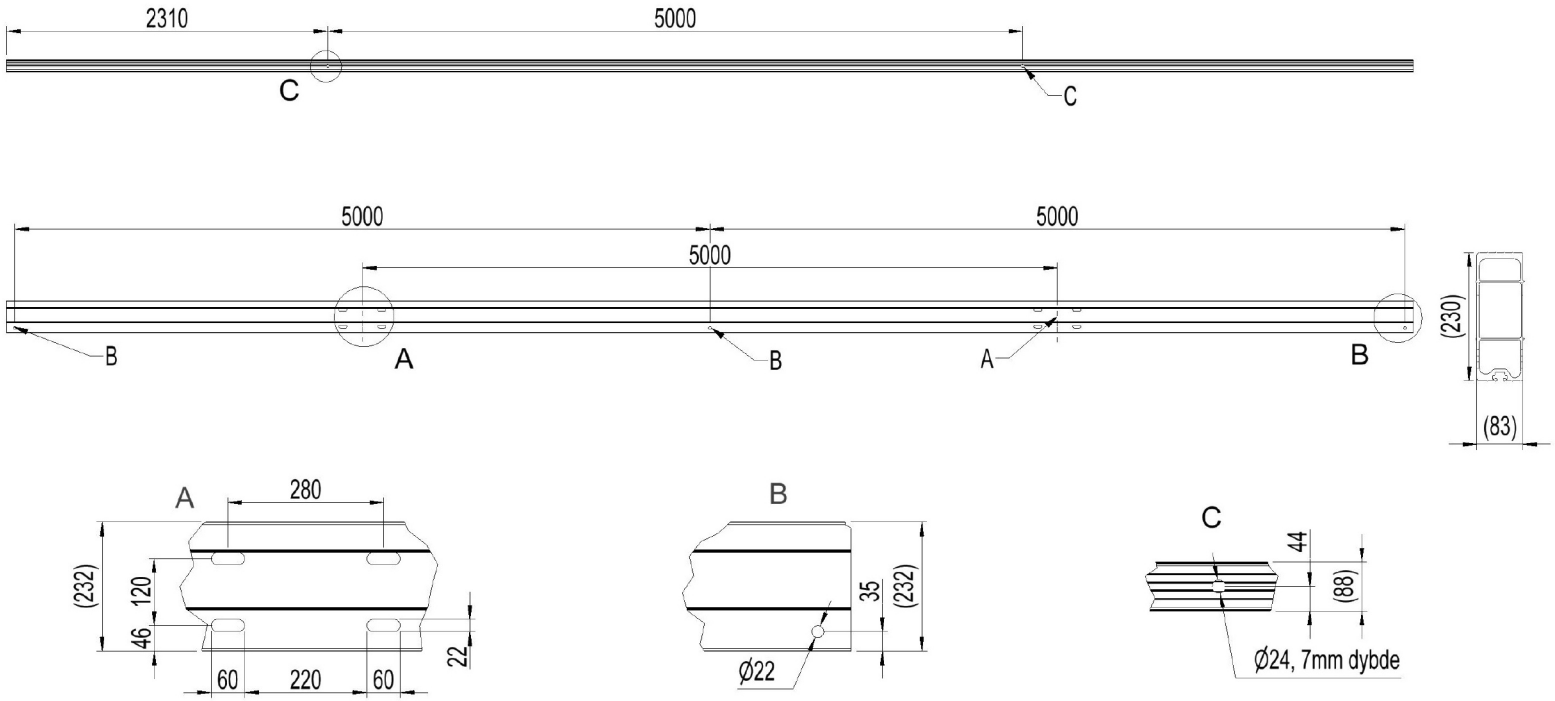

Sales and development, Trondhei

Østre Rosten 84G
7075 Tiller
Phone: 976 74 000
Email: info@el-tjeneste.no

www.el-tjeneste.no

Factory and warehouse, Steinkje

Jæktsmedgata 4
7725 Steinkjer
Phone: 976 74 000
Email: info@el-tjeneste.no

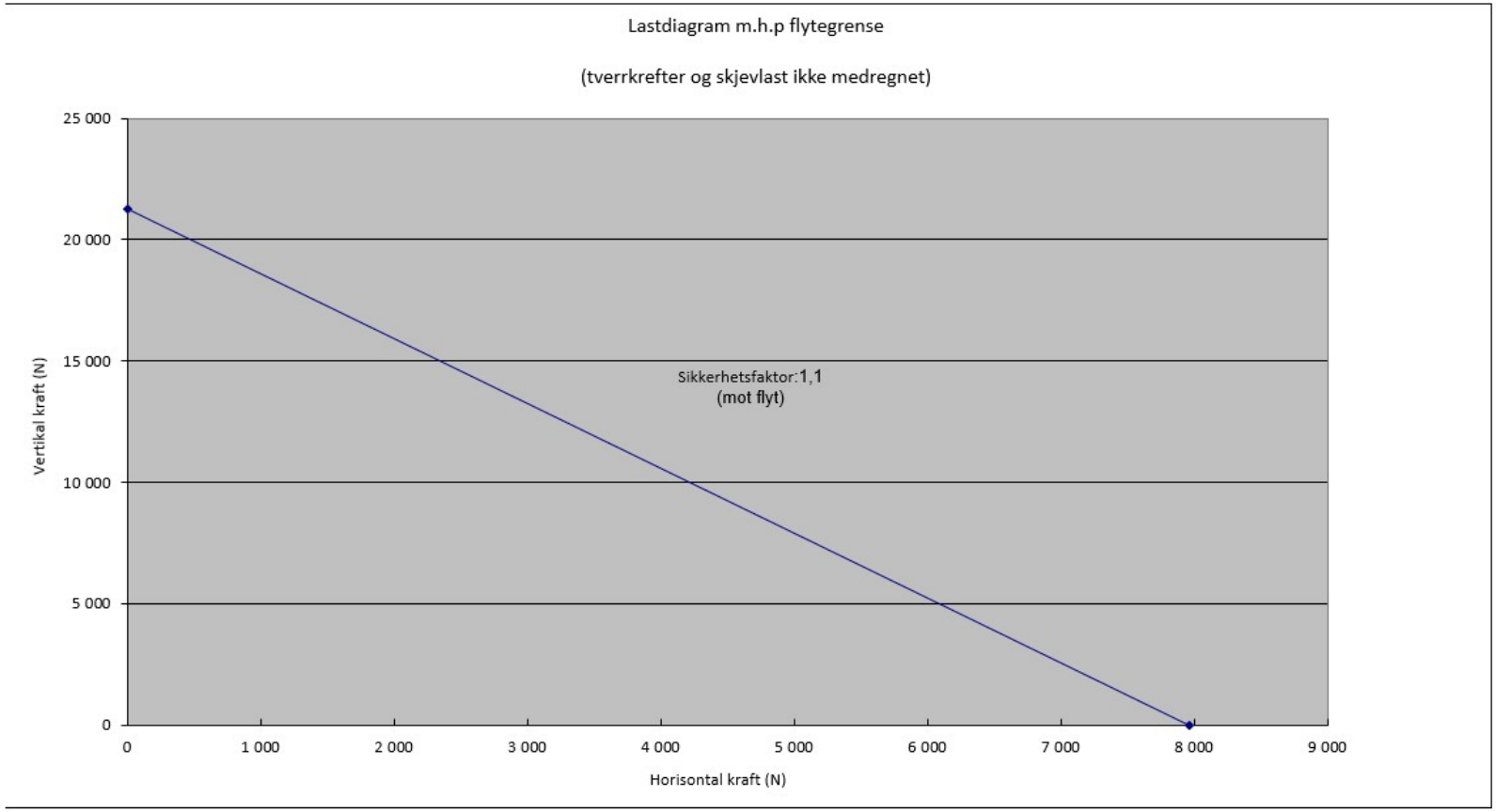

Sales and development, Trondhei
Østre Rosten 84G
7075 Tiller
Phone: 976 74 000
Email: info@el-tjeneste.no

www.el-tjeneste.no

Factory and warehouse, Steinkje
Jæktsmedgata 4
7725 Steinkjer
Phone: 976 74 000
Email: info@el-tjeneste.no

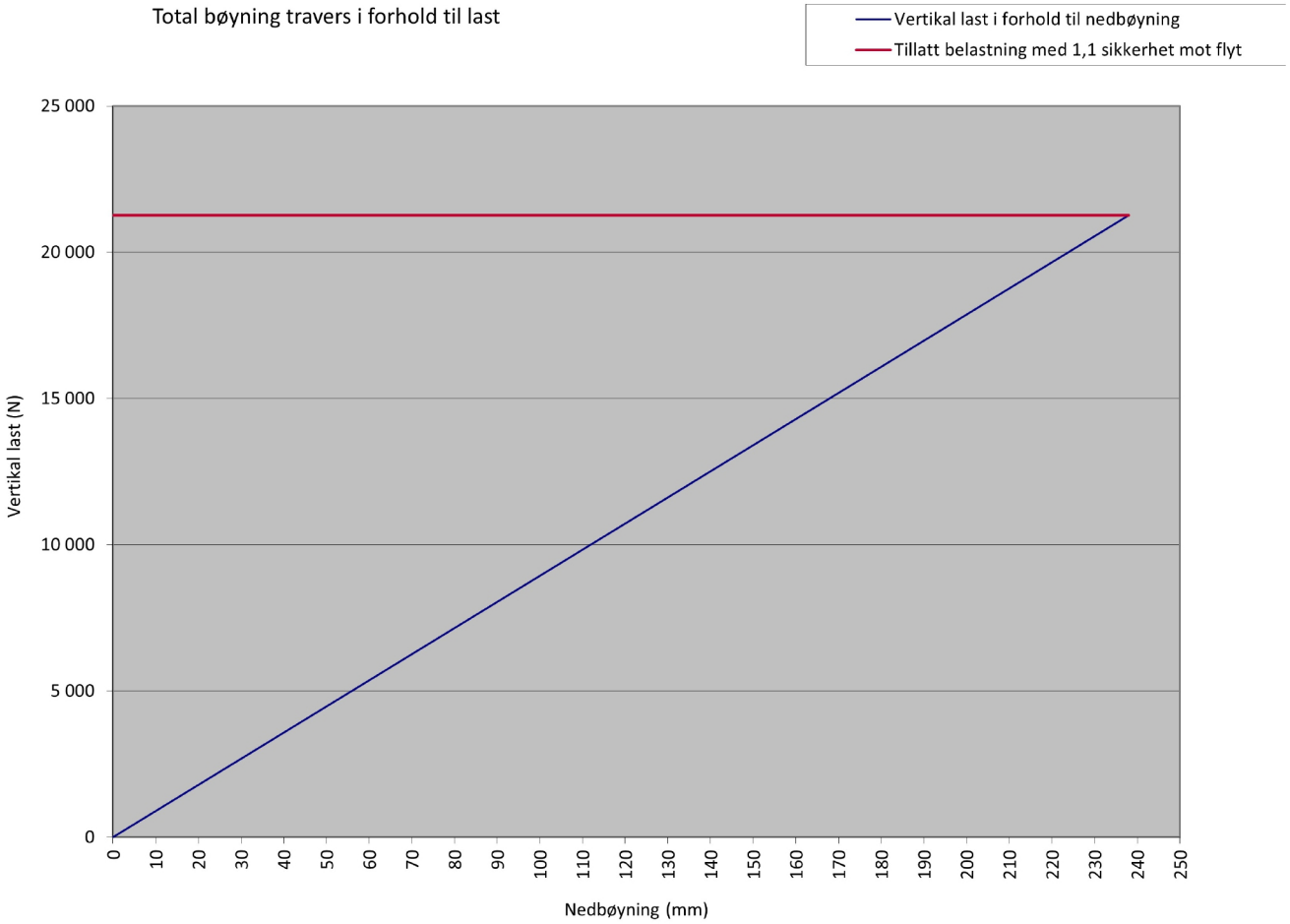

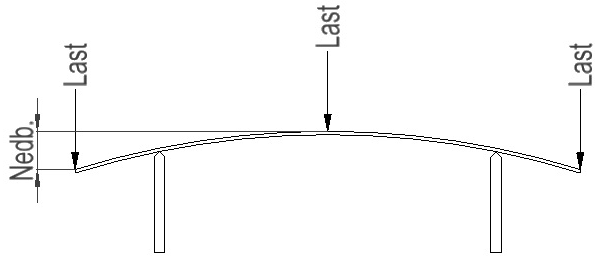

Sales and development, Trondhei

Østre Rosten 84G
7075 Tiller
Phone: 976 74 000
Email: info@el-tjeneste.no

www.el-tjeneste.no

Factory and warehouse, Steinkje

Jæktsmedgata 4
7725 Steinkjer
Phone: 976 74 000
Email: info@el-tjeneste.no