2836818 - Crossbar for transformer TRB2S-A5

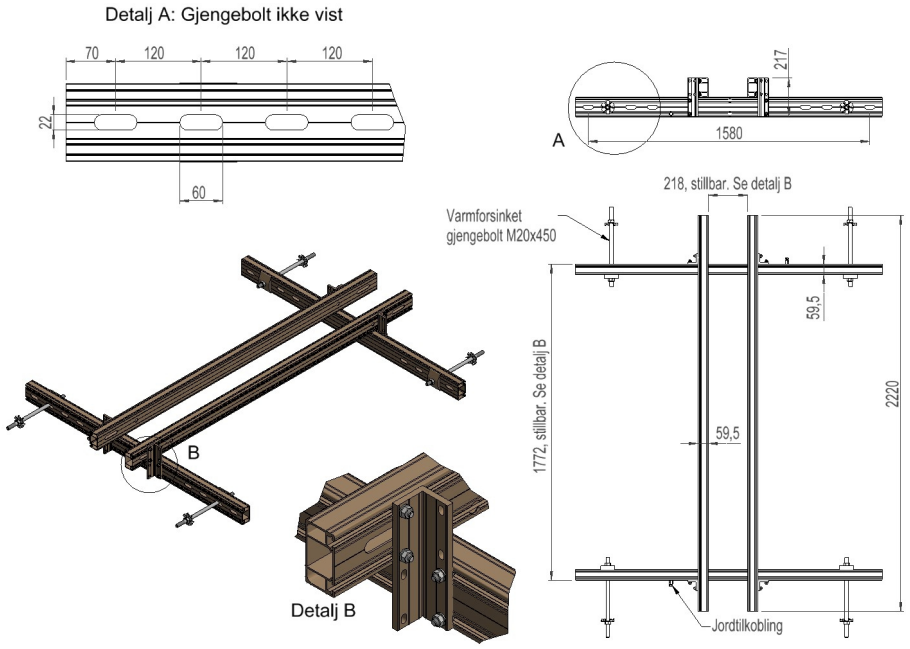

Description	Crossbar for transformer. Pole distance 2m (A 1:5).
Unit	SET
Weight	36 kg
Material	Aluminium, anodised-brown
Crossarm type	H/A-pole
Pole distance	2m
Crossbar profile	P1 (57,5x107)
Yield strength (static)	16kN

Sales and development, Trondhei
Østre Rosten 84G
7075 Tiller
Phone: 976 74 000
Email: info@el-tjeneste.no

Factory and warehouse, Steinkje
Jæktsmedgata 4
7725 Steinkjer
Phone: 976 74 000
Email: info@el-tjeneste.no

www.el-tjeneste.no