2836839 - Anch. crossbar TF2006D-3S	
Cross arm type	H/A-pole
Pole distance	2m
Phase distance	0,6m
Pole fastening	280mm-single poleclamp

Crossbar profile P3 (laying)

Weight: (kg/m)	11.238
Cross section: (mm2)	4162
Material:	Extruded aluminum, brown anodized
Alloy:	AlMgSi 6082-T6
Moment of resistance: (mm3)	Wx= 114 771 Wy= 176 412
Area moment of inertia: (mm4)	Ix= 6 593 950 Iy= 14 286 921
Center distance for Ix: (mm)	Cx= 57,45
Center distance for Iy: (mm)	Cy= 80,99
Minimum yield strength 0,2: (N/mm2)	250
Minimum breaking load: (N/mm2)	290

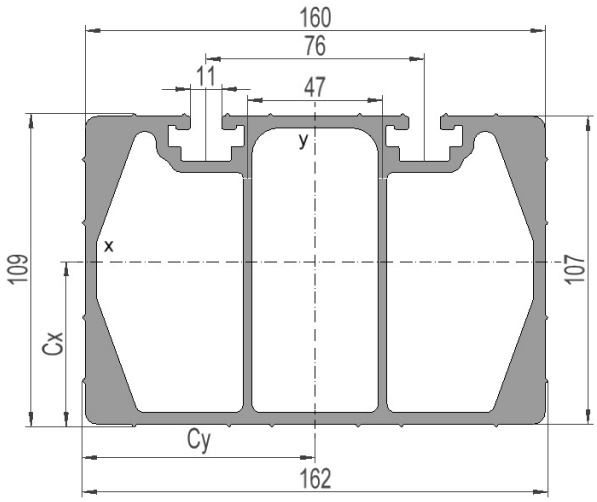

Sales and development, Trondhei
Østre Rosten 84G
7075 Tiller
Phone: 976 74 000
Email: info@el-tjeneste.no

Factory and warehouse, Steinkje
Jæktsmedgata 4
7725 Steinkjer
Phone: 976 74 000
Email: info@el-tjeneste.no

www.el-tjeneste.no

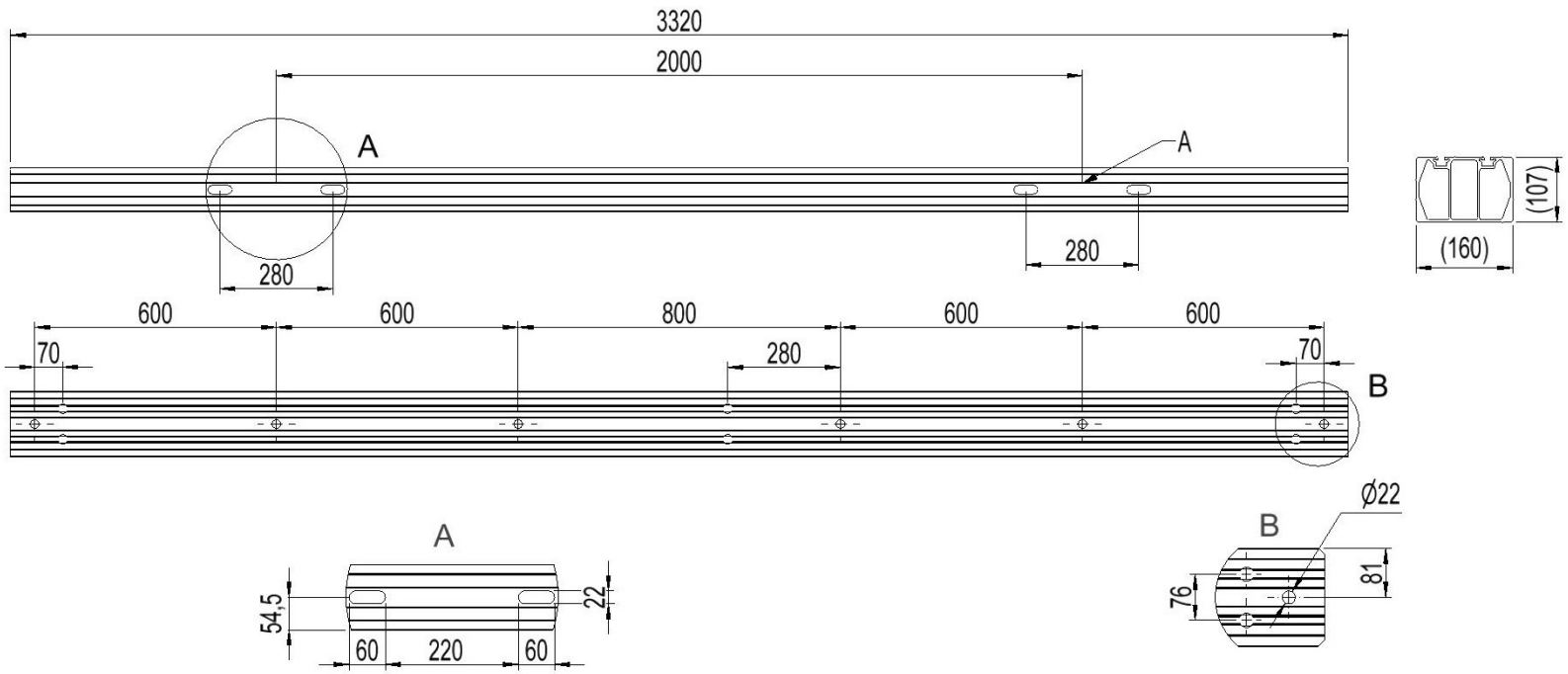

Sales and development, Trondhei

Østre Rosten 84G
7075 Tiller
Phone: 976 74 000
Email: info@el-tjeneste.no

www.el-tjeneste.no

Factory and warehouse, Steinkje

Jæktsmedgata 4
7725 Steinkjer
Phone: 976 74 000
Email: info@el-tjeneste.no

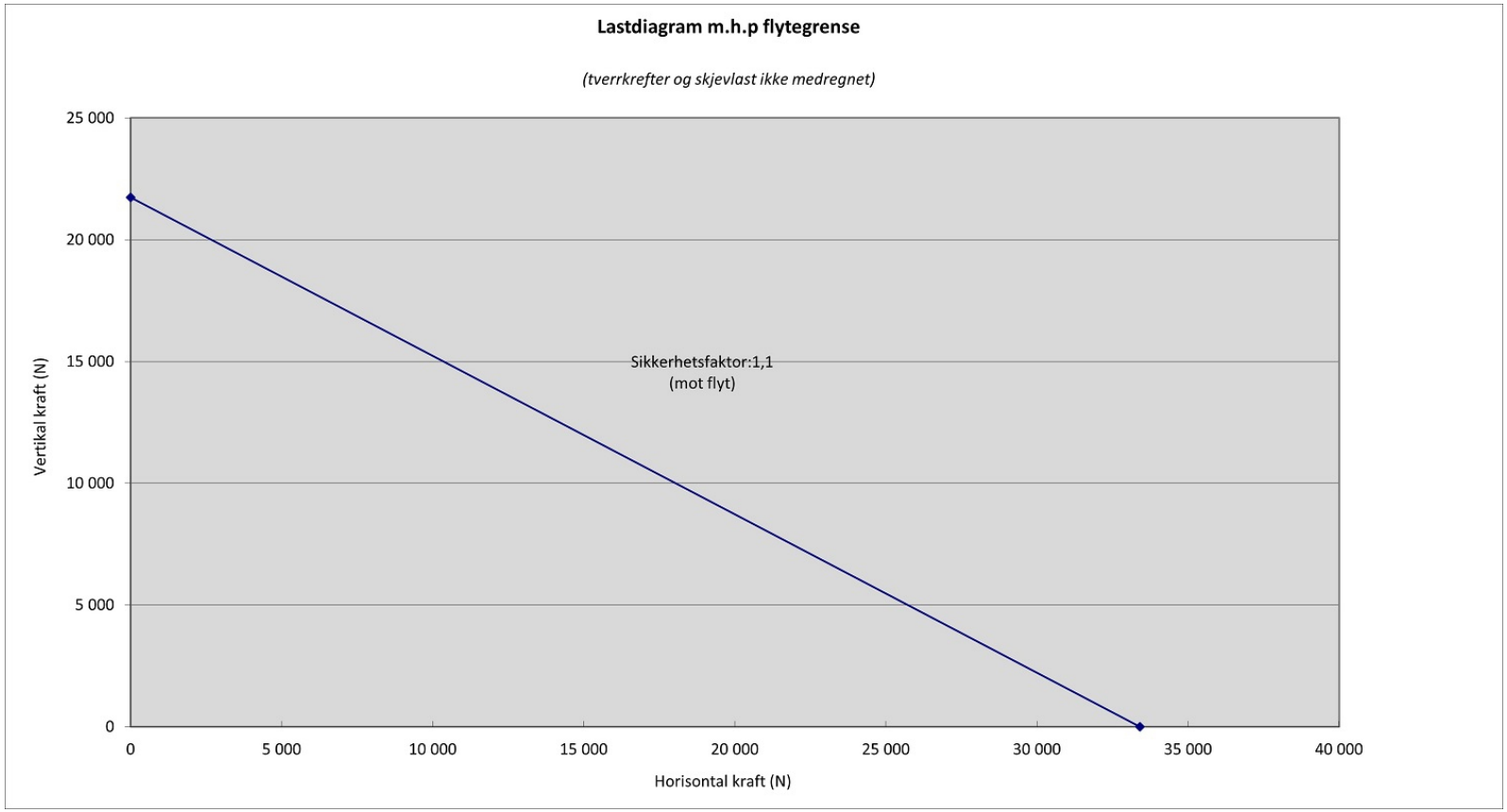

Sales and development, Trondhei
Østre Rosten 84G
7075 Tiller
Phone: 976 74 000
Email: info@el-tjeneste.no

www.el-tjeneste.no

Factory and warehouse, Steinkje
Jæktsmedgata 4
7725 Steinkjer
Phone: 976 74 000
Email: info@el-tjeneste.no