DATASHEET

2836883 - TE5S

EL-tjeneste as
Norwegian quality and innovation

2836883 - Load-bearing crossbar TE5S	
Cross arm type	E-pole
Pole distance	
Phase distance	0,5m
Pole fastening	280mm-single poleclamp

Crossbar profile P1 (standing)

Weight: (kg/m)	3.857
Cross section: (mm2)	1428
Material:	Extruded aluminum, brown anodized
Alloy:	AlMgSi 6005A-T6
Moment of resistance: (mm3)	Wx= 37 608 Wy= 21 153
Area moment of inertia: (mm4)	Ix= 2 049 632 Iy= 645 852
Center distance for Ix: (mm)	Cx= 54,50
Center distance for Iy: (mm)	Cy= 30,53
Minimum yield strength 0,2: (N/mm2)	215
Minimum breaking load: (N/mm2)	255

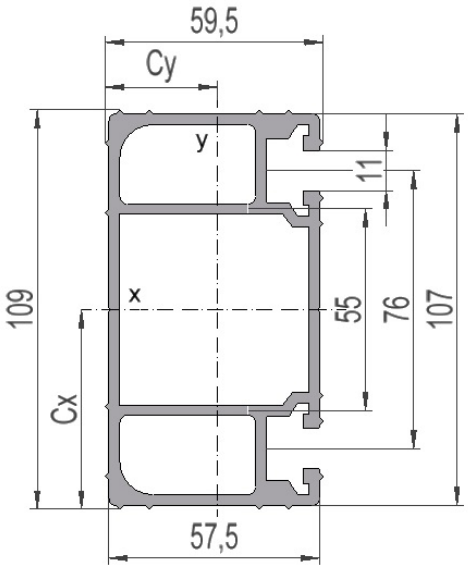

Sales and development, Trondhei
Østre Rosten 84G
7075 Tiller
Phone: 976 74 000
Email: info@el-tjeneste.no

Factory and warehouse, Steinkje
Jæktsmedgata 4
7725 Steinkjer
Phone: 976 74 000
Email: info@el-tjeneste.no

www.el-tjeneste.no

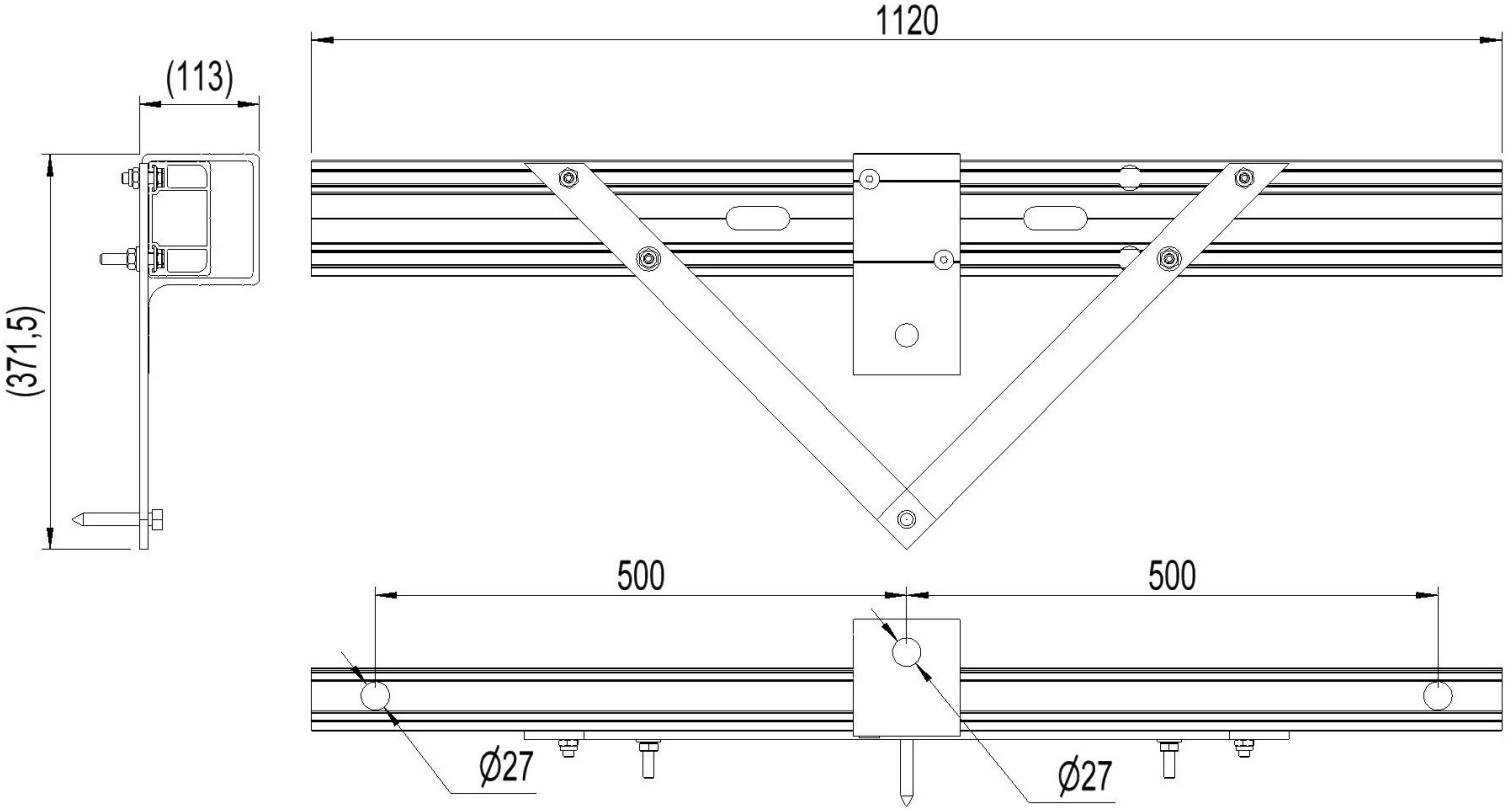

Sales and development, Trondhei
Østre Rosten 84G
7075 Tiller
Phone: 976 74 000
Email: info@el-tjeneste.no

www.el-tjeneste.no

Factory and warehouse, Steinkje
Jæktsmedgata 4
7725 Steinkjer
Phone: 976 74 000
Email: info@el-tjeneste.no

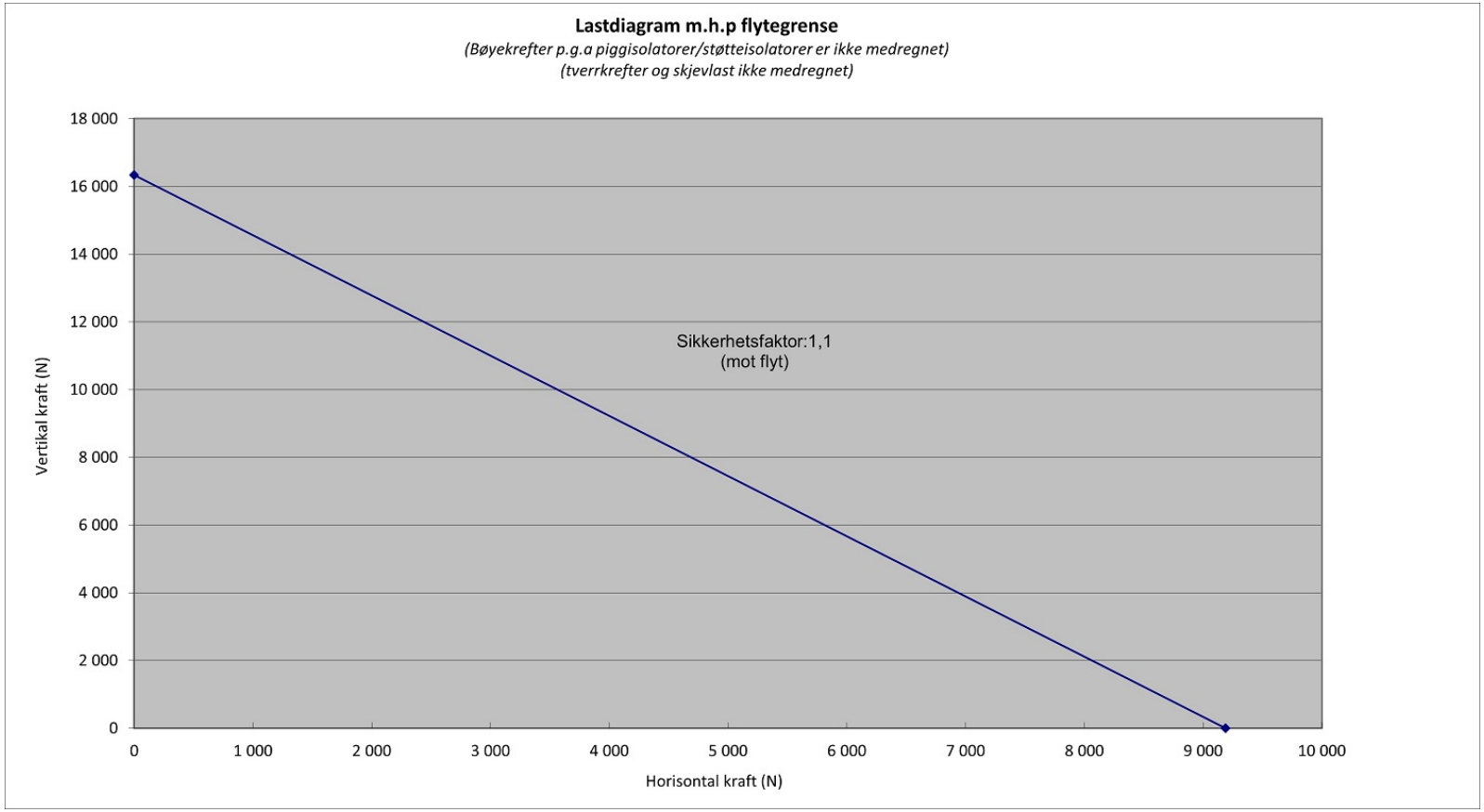

Sales and development, Trondhei
Østre Rosten 84G
7075 Tiller
Phone: 976 74 000
Email: info@el-tjeneste.no

www.el-tjeneste.no

Factory and warehouse, Steinkje
Jæktsmedgata 4
7725 Steinkjer
Phone: 976 74 000
Email: info@el-tjeneste.no