2836887 - Anch. crossbar TF87S	
Cross arm type	H/A-pole
Pole distance	0,8m
Phase distance	0,7m
Pole fastening	Bolt, 280mm-single poleclamp

Crossbar profile P2 (laying)

Weight: (kg/m)	6.707
Cross section: (mm2)	2484
Material:	Extruded aluminum, brown anodized
Alloy:	AlMgSi 6082-T6
Moment of resistance: (mm3)	Wx= 46 031 Wy= 77 773
Area moment of inertia: (mm4)	Ix= 2 038 074 Iy= 4 744 150
Center distance for Ix: (mm)	Cx= 44,28
Center distance for Iy: (mm)	Cy= 61,00
Minimum yield strength 0,2: (N/mm2)	250
Minimum breaking load: (N/mm2)	290

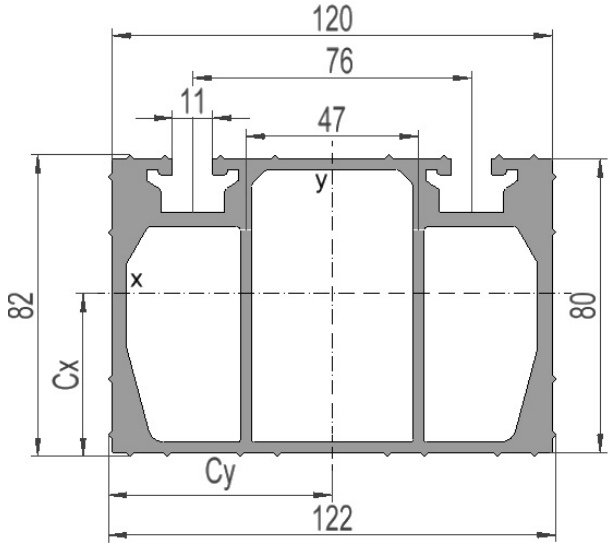

Sales and development, Trondhei
Østre Rosten 84G
7075 Tiller
Phone: 976 74 000
Email: info@el-tjeneste.no

Factory and warehouse, Steinkje
Jæktsmedgata 4
7725 Steinkjer
Phone: 976 74 000
Email: info@el-tjeneste.no

www.el-tjeneste.no

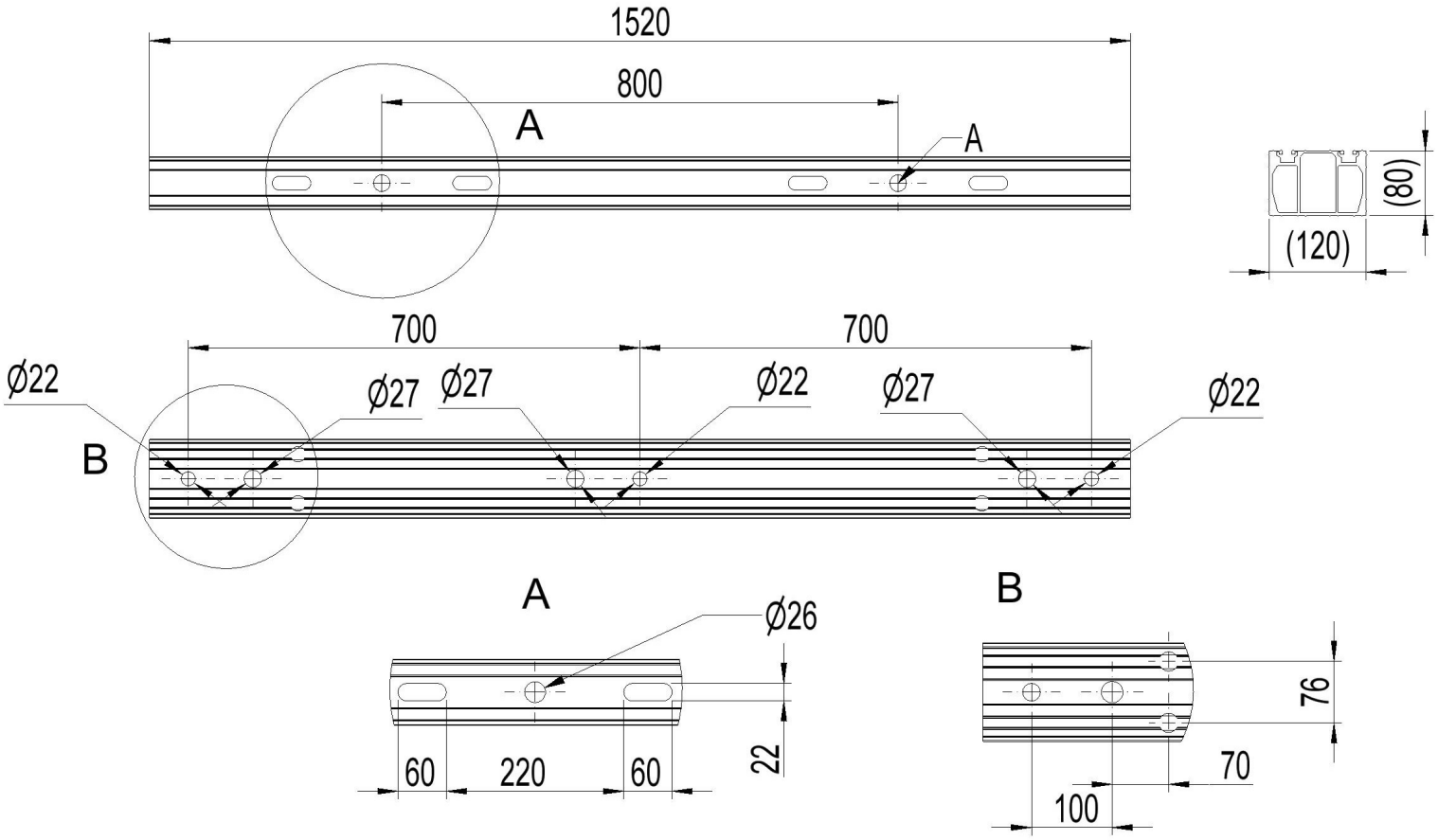

Sales and development, Trondhei
Østre Rosten 84G
7075 Tiller
Phone: 976 74 000
Email: info@el-tjeneste.no

Factory and warehouse, Steinkje
Jæktsmedgata 4
7725 Steinkjer
Phone: 976 74 000
Email: info@el-tjeneste.no

www.el-tjeneste.no

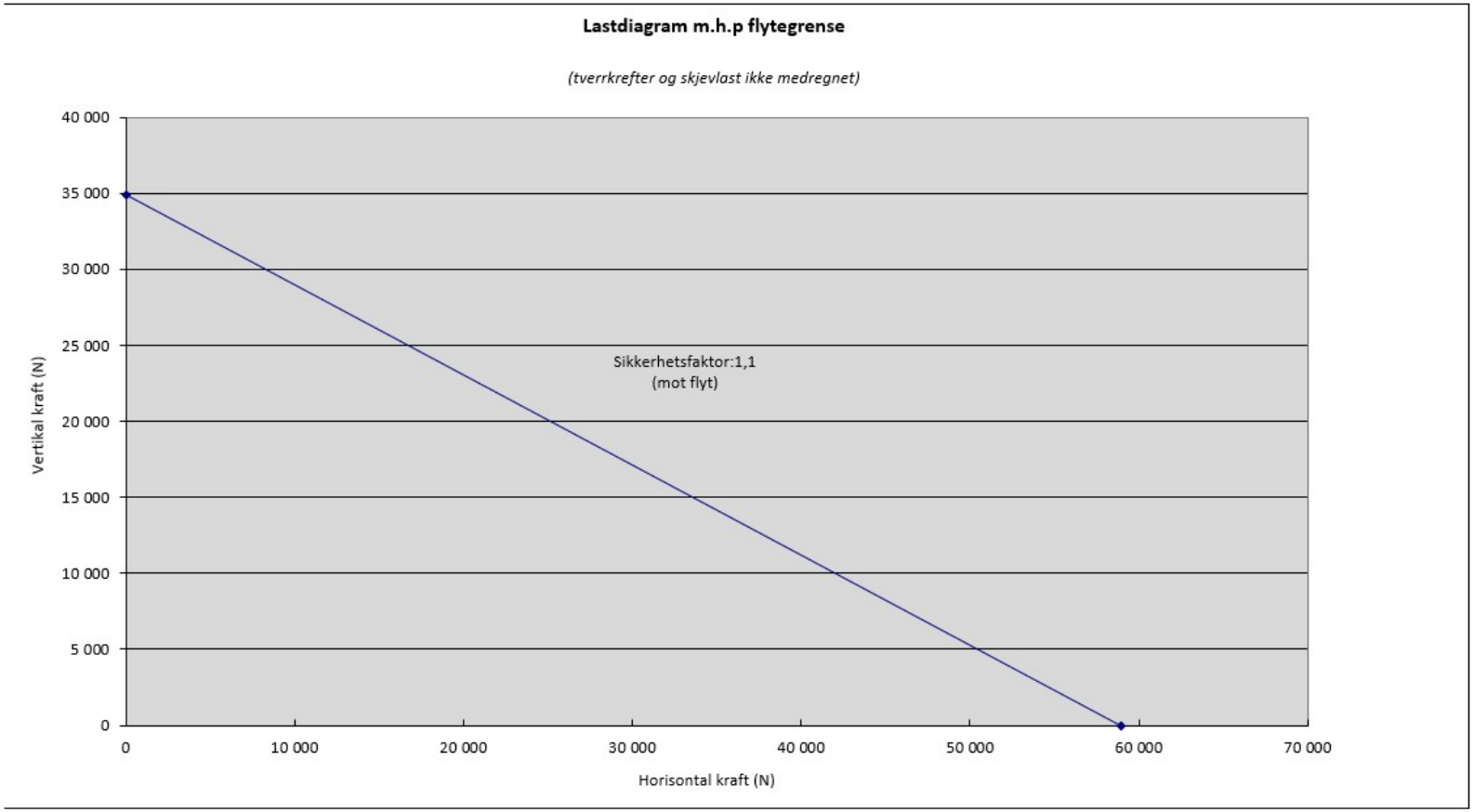

Sales and development, Trondhei
Østre Rosten 84G
7075 Tiller
Phone: 976 74 000
Email: info@el-tjeneste.no

www.el-tjeneste.no

Factory and warehouse, Steinkje
Jæktsmedgata 4
7725 Steinkjer
Phone: 976 74 000
Email: info@el-tjeneste.no