2837467 - UNI-Rail UNI-412-L3

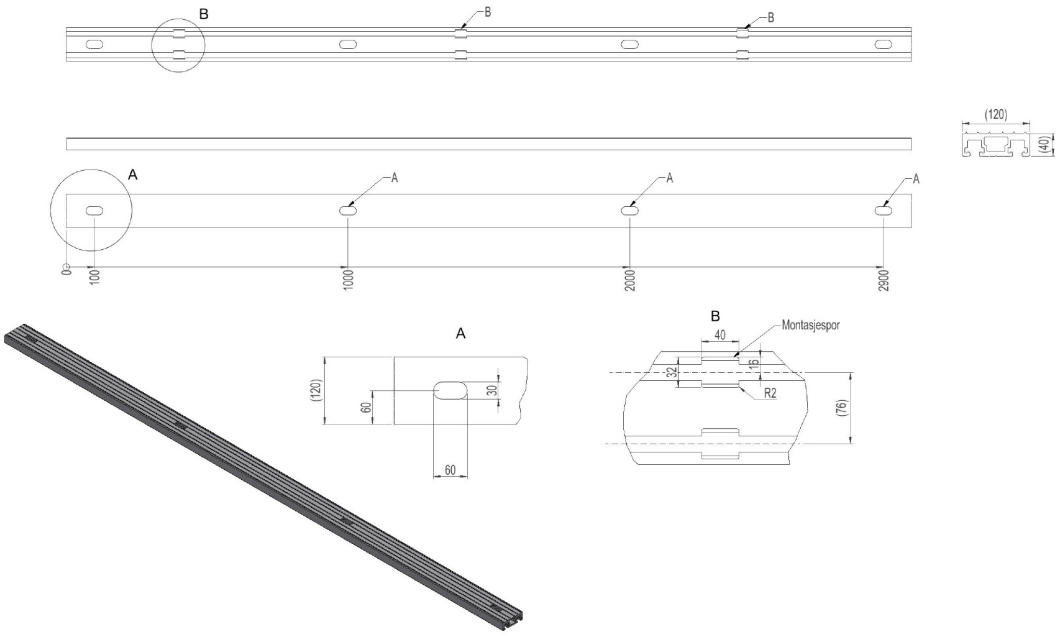

Description	Straight aluminiumsprofil with two tracks for equipment SUP washer fitting the screw diameter is used in the tracks Lenght 3m with slots for attachment
Unit	PSC
Weight	19,86 kg
Material	Aluminium

Sales and development, Trondhei

Østre Rosten 84G
7075 Tiller
Phone: 976 74 000
Email: info@el-tjeneste.no

www.el-tjeneste.no

Factory and warehouse, Steinkje

Jæktsmedgata 4
7725 Steinkjer
Phone: 976 74 000
Email: info@el-tjeneste.no