DATASHEET

2857998 - S150

EL-tjeneste as

Norwegian quality and innovation

2857998 - Al-bar S150

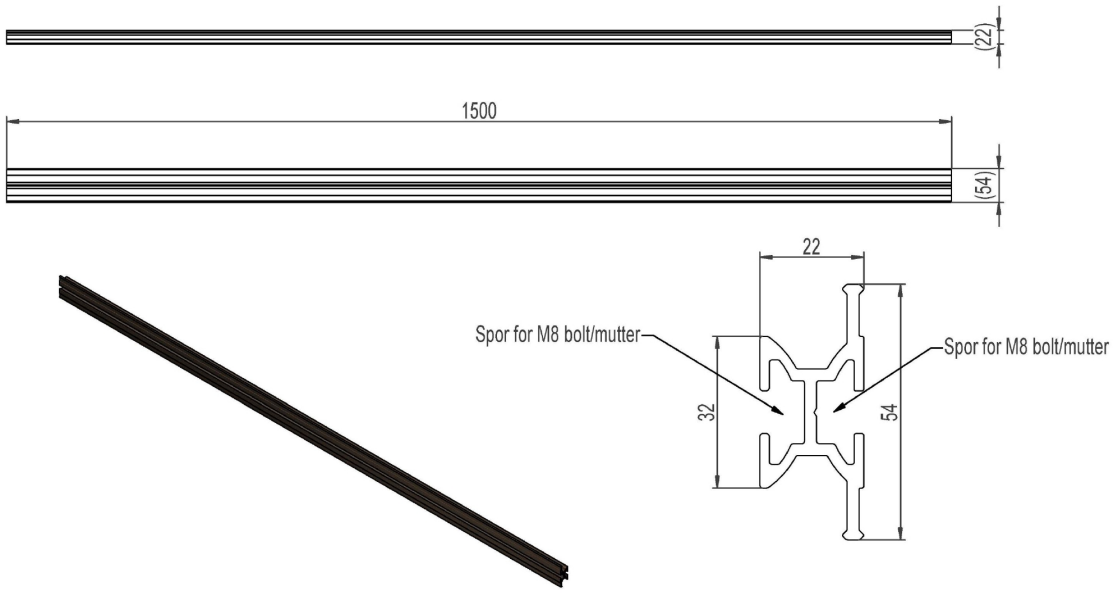

Description	Aluminium bar for cable duct. L=1,5m. For M8 bolts.
Unit	PSC
Weight	1,9 kg
Material	Aluminium, anodised-brown

Sales and development, Trondhei
Østre Rosten 84G
7075 Tiller
Phone: 976 74 000
Email: info@el-tjeneste.no

Factory and warehouse, Steinkje
Jæktsmedgata 4
7725 Steinkjer
Phone: 976 74 000
Email: info@el-tjeneste.no

www.el-tjeneste.no