USER MANUAL

NEUTRAL POINT SURGE ARRESTER

Sales/Development, Trondheim Østre Rosten 84G
NO-7075 Tiller
Phone: +47 976 74 000
www.el-tjeneste.no Mail: info@el-tjeneste.no

Factory/Warehouse, Steinkjer Jæktsmedgata 4
NO-7725 Steinkjer
Phone: +47 976 74 000
Mail: info@el-tjeneste.no

1 CONTENTS

2 Product overview 3
3 General description 4
3.1 Operation 4
4 Specifications 5
4.1 Contact relay 5
4.2 Fuse characteristics 6
4.3 Mounting brackets for NPS 7
5 Installation 8
6 Maintenance 10
6.1 Check if red marking in front 10
6.2 Changing fuse 12

Sales/Development, Trondheim Østre Rosten 84G
NO-7075 Tiller
Phone: +47 976 74 000
www.el-tjeneste.no Mail: info@el-tjeneste.no

Factory/Warehouse, Steinkjer Jæktsmedgata 4
NO-7725 Steinkjer
Phone: +47 976 74 000
Mail: info@el-tjeneste.no

2 PRODUCT OVERVIEW

Order number	System voltage	Type	Description
2864759	240V IT	NPS240S-V	Neutral point surge arrester 240V, for wall mounting
2864760	240V IT	NPS240S-M	Neutral point surge arrester 240V, for pole mounting
2864761	400V IT	NPS400S-V	Neutral point surge arrester 400V, for wall mounting
2864763	690V IT	NPS690S-V	Neutral point surge arrester 690V, for wall mounting
2851776	1000V IT	NPS1000S-M	Neutral point surge arrester 1000V, for pole mounting
2851777	1000V IT	NPS1000S-V	Neutral point surge arrester 1000V, for wall mounting
2864762	240V IT	NPS240S-UF	Neutral point surge arrester 240V, without mouting
2864771	240V IT	NPS240S.M3K	Neutral point surge arrester 240V, with pole mounting and triangle lock
2864772	240V IT	NPS240S-V-KS	Neutral point surge arrester 240V, with wall mounting and connection for cable shoes. Ment for cables >50mm²
2864774	400V IT	NPS400S-V-KS	Neutral point surge arrester 400V, with wall mounting and connection for cable shoes. Ment for cables >50mm²
2864775	690V IT	NPS690S-V-KS	Neutral point surge arrester 690V, with wall mounting and connection for cable shoes. Ment for cables >50mm²
2864752		SM240	Fuse, spare part
2864753	240V IT	AV240	Surge arrester, spare part
2864764	400V IT	AV400	Surge arrester, spare part
2864765	690V IT	AV690	Surge arrester, spare part
2851779	1000V IT	AV1000	Surge arrester, spare part

Sales/Development, Trondheim Østre Rosten 84G
NO-7075 Tiller
Phone: +47 976 74 000
www.el-tjeneste.no Mail: info@el-tjeneste.no

Factory/Warehouse, Steinkjer Jæktsmedgata 4
NO-7725 Steinkjer
Phone: +47 976 74 000
Mail: info@el-tjeneste.no

3 GENERAL DESCRIPTION

Neutral point surge arrester (NPS) is designed for use in low voltage systems with insulated transformer neutral point (IT grids). The Neutral point surge arrester shall limit the problems with overvoltages in low voltage IT (Insulated Terra) distribution grids. It prevents overvoltages from spreading from transformer high voltage side to consumers on the low voltage side.

The NPS consists of a surge arrester with an air gap in series with a fuse.

3.1 OPERATION

When a overvoltage occures at a level higher than the spark-over voltage of the arrester the arrester will begin to conduct, and a current will flow through the arrester and further through the fuse. This creates a temporarly connection between the transformers neutral point and ground connection.
When the voltage is reduced below the cut-off voltage level, the arrester will stop conducting and the current flow is cut off. This causes the transformer neutral point to be re-insulated from ground.

Short-term overvoltage:
Short-term overvoltages, such as an overvoltages caused by lightning, will normally last for such a short time that the fuse will not melt, and then there will be no permanent change in the NPS. After the lightning pulse is over, the arrester resistance increases and the arc over the air gap in the arrester extinguishes.

Long-term overvoltage:
If the overvoltage is caused by (50Hz) voltage, it will normally be a permanent fault in the power grid. For example, insulation faults in the transformer which could lead to a danger for the consumers connected to the low voltage grid.

In such cases, regulations require that the neutral point will be permanently connected to ground potential until the fault has been rectified.

The NPS does this by that the fuse melts due to a higher current flows over a long period of time, if the overvoltage is permanent. Two spring-loaded contact arms then short-circuits between the neutral point- and ground terminal.

A local fault indication will appear on the front panel of the NPS with a red flag instead of white (normal state).
The NPS is also equipped with a contact relay for remote fault signal.

Before installing a new fuse, the surge arrester needs to be checked. The procedure for this operation is described on the inside of the NPSs lid and in the Maintenance chapter.

For the best possible safety when changing the fuse, the fuse is equipped with an insulating handle and one of the contact arms short-circuits the neutral point to ground while the fuse is being replaced.

Sales/Development, Trondheim Østre Rosten 84G
NO-7075 Tiller
Phone: +47 976 74 000
www.el-tjeneste.no Mail: info@el-tjeneste.no

Factory/Warehouse, Steinkjer Jæktsmedgata 4
NO-7725 Steinkjer
Phone: +47 976 74 000
Mail: info@el-tjeneste.no

4 SPECIFICATIONS

- Durable, self-extinguishing and weatherproof enclosure.
- Clear visible indication of crashed melting fuse.
- Touch-proof and safe replacement of melt protection.
- Connection terminals for copper (Cu) and aluminium (Al) cables, 16 - 50mm².
  Tightening torque: 10Nm
- Double short circuit connectors, one of which is extra fast.

The Neutral Point Surge arrester can be delivered with either a pole or wall mounting bracket.

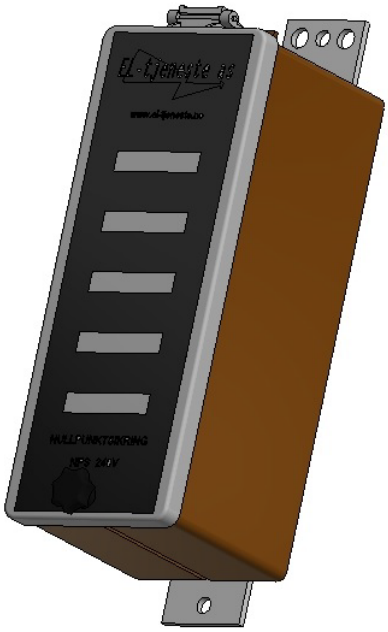

With wall mounting bracket

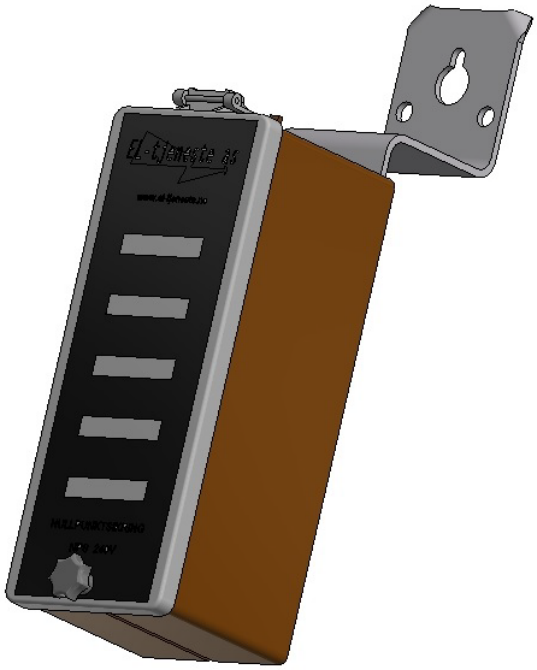

With pole mounting bracket

4.1 CONTACT RELAY

All Netral Point Surge arrester (NPS) are equipped with a contact relay for remote status/alarm indication. There is both a normally closed (NC) and normally OPEN (NO) contact set.

Fuse is intact, transformer neutral point is isolated from ground: Signal contact 1-2 is closed, 3-4 open (as in drawing).

Fuse is blown, transformer neutral point is to permanently connected to ground: Signal contact 1-2 is open, 3-4 closed.

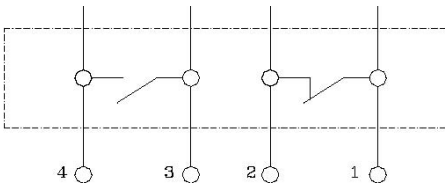

Sales/Development, Trondheim Østre Rosten 84G
NO-7075 Tiller
Phone: +47 976 74 000
www.el-tjeneste.no Mail: info@el-tjeneste.no

Factory/Warehouse, Steinkjer Jæktsmedgata 4
NO-7725 Steinkjer
Phone: +47 976 74 000
Mail: info@el-tjeneste.no

4.2 FUSE CHARACTERISTICS

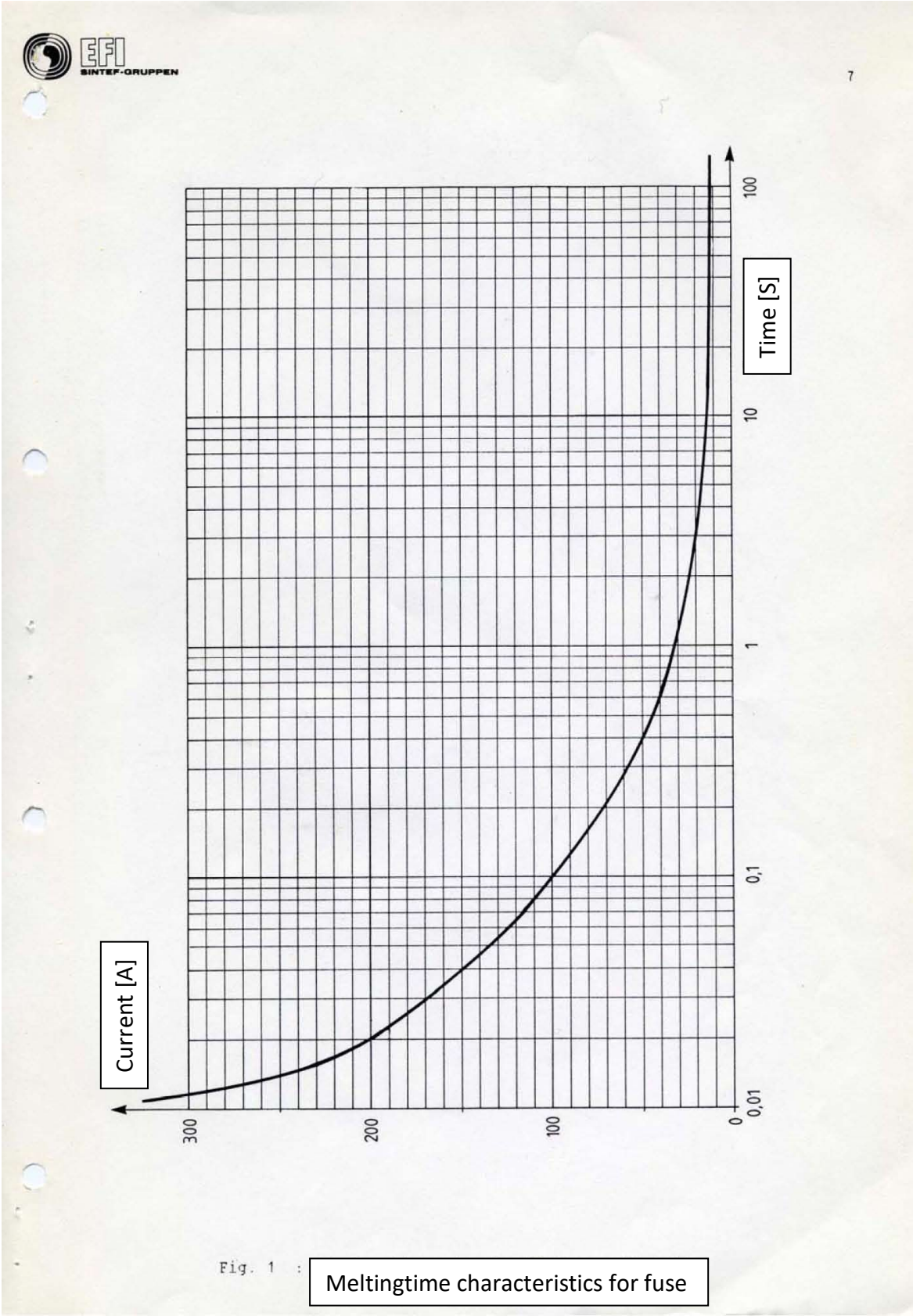

Sales/Development, Trondheim Østre Rosten 84G
NO-7075 Tiller
Phone: +47 976 74 000
www.el-tjeneste.no Mail: info@el-tjeneste.no

Factory/Warehouse, Steinkjer Jæktsmedgata 4
NO-7725 Steinkjer
Phone: +47 976 74 000
Mail: info@el-tjeneste.no

4.3 MOUNTING BRACKETS FOR NPS

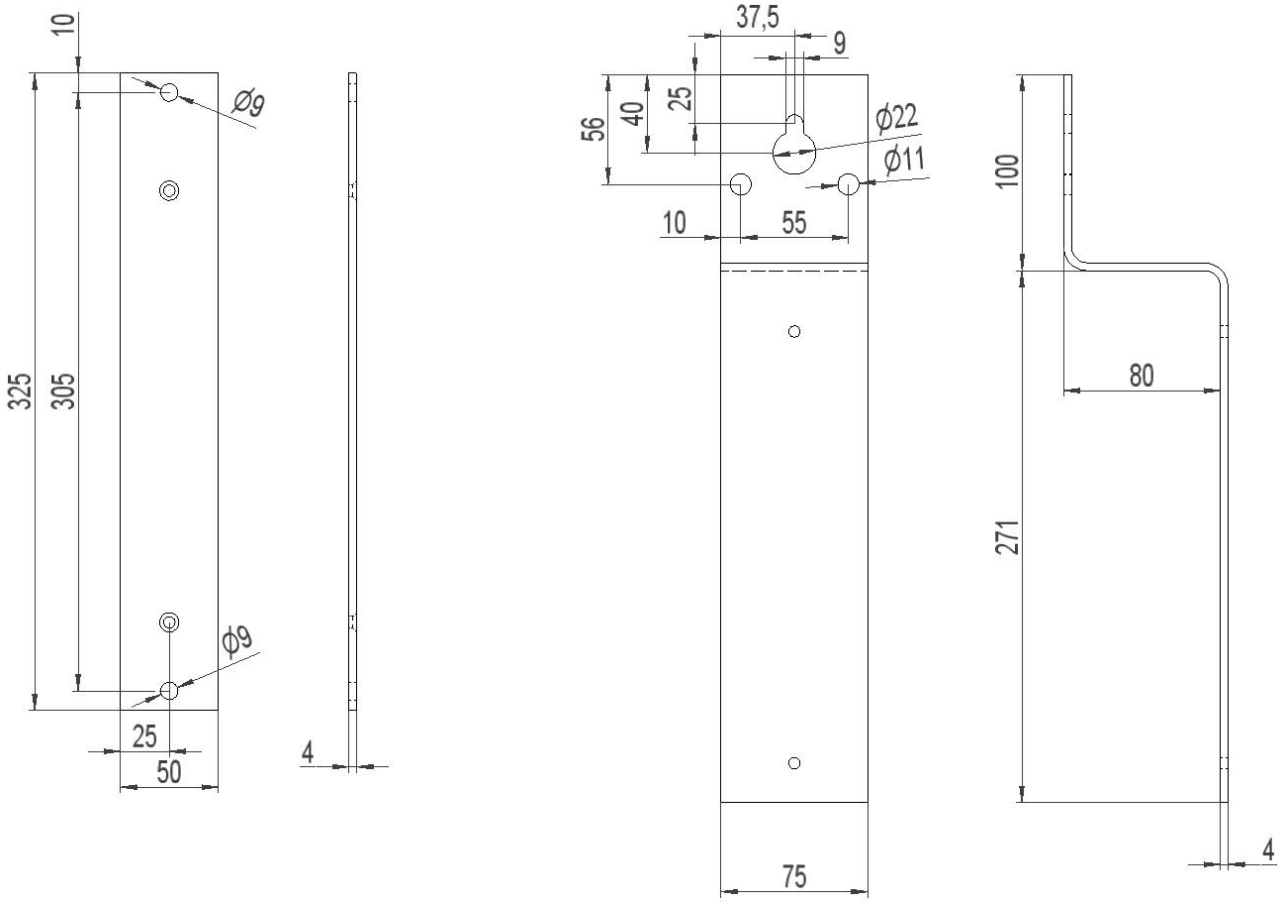

Sales/Development, Trondheim Østre Rosten 84G
NO-7075 Tiller
Phone: +47 976 74 000
www.el-tjeneste.no Mail: info@el-tjeneste.no

Factory/Warehouse, Steinkjer Jæktsmedgata 4
NO-7725 Steinkjer
Phone: +47 976 74 000
Mail: info@el-tjeneste.no

5 INSTALLATION

Star (Y) connected transformer.
On transformers where the low voltage winding has a star (Y) connection, the Neutral Point Surge arrester (NPS) is to be connected between the neutral point and ground.

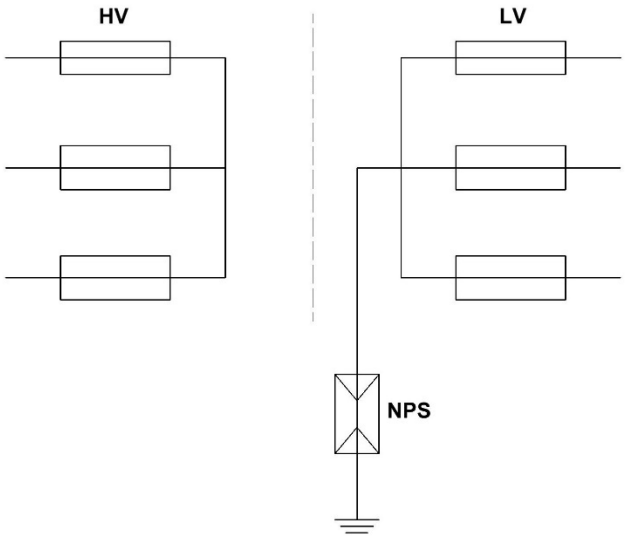

Delta (D) connected transformer.
On transformers where the low voltage winding has a delta (D) connection, the Neutral Point Surge arrester (NPS) is to be connected between a phase and ground.

If a re-connectable transformer is used, with both 240V and 400V possibility, 240V will be delta (D) connected and 400V will be star (Y) connected. The Neutral Point Surge arrester (NPS) is then connected between phase and ground.

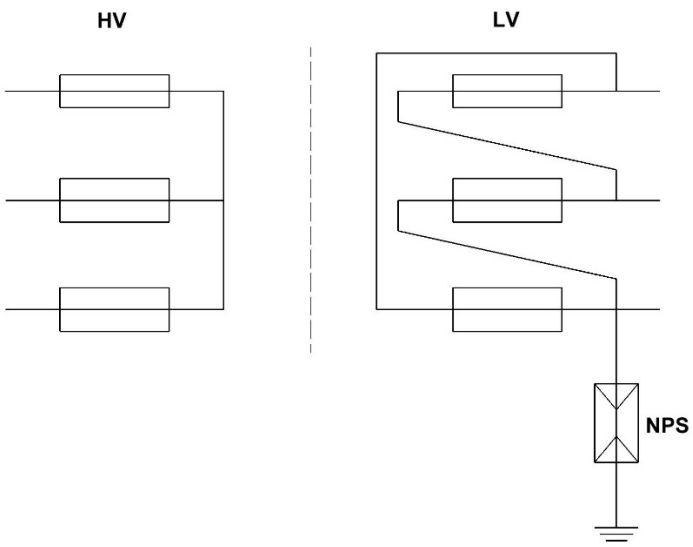

Sales/Development, Trondheim Østre Rosten 84G
NO-7075 Tiller
Phone: +47 976 74 000
www.el-tjeneste.no Mail: info@el-tjeneste.no

Factory/Warehouse, Steinkjer Jæktsmedgata 4
NO-7725 Steinkjer
Phone: +47 976 74 000
Mail: info@el-tjeneste.no

Separate grounding for Neutral Point Surge arrester (NPS):

To protect the transformer against breakdown, due to lightning surges, the ground electrode for the Neutral Point Surge arrester should be laid separately from the grounding arrangement in the transformer system.

Cable connections:

To best avoid corrosion problems in terminals for neutral- and ground cable, if moist should enter, it is recommended to apply a suitable type of grease.

To avoid water ingress into terminals when mounted in poles / outdoors, the following measures must be taken:

1. Apply heat shrink tube between cable lug and the conductor's insulation on all insulated cables. If the cable lug has an inspection hole, the heat shrink tube should cover this.

2. All cables that are routed from above down to the location of the Neutral point surge arrester must have a “drip nose” before they are routed into the enclosure.

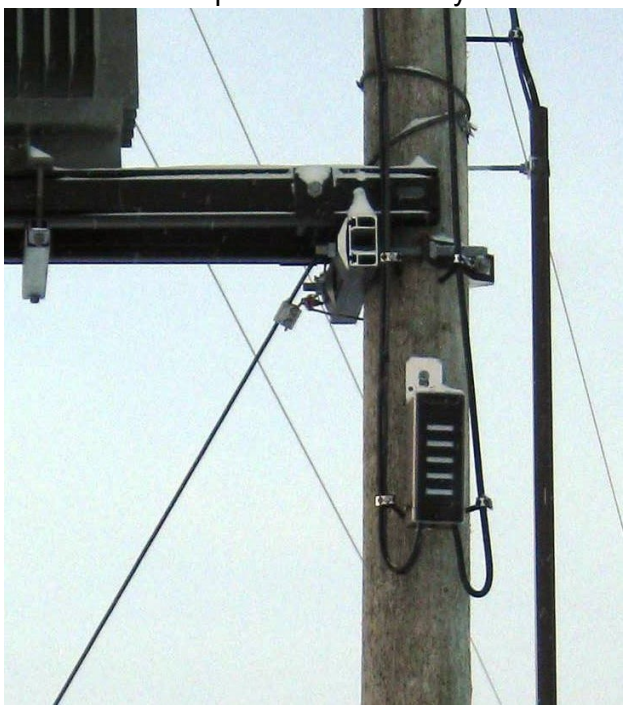

Sales/Development, Trondheim Østre Rosten 84G
NO-7075 Tiller
Phone: +47 976 74 000
www.el-tjeneste.no Mail: info@el-tjeneste.no

Factory/Warehouse, Steinkjer Jæktsmedgata 4
NO-7725 Steinkjer
Phone: +47 976 74 000
Mail: info@el-tjeneste.no

6 MAINTENANCE

Always use the necessary safety equipment, such as insulating gloves and insulated tools, as there may be voltage between the zero point and the ground.

Inspection and maintenance must not be performed until it has been checked that there is no fault in the transformer.

6.1 CHECK IF RED MARKING IN FRONT

Red marking in the lid indicates that the fuse has melted and the neutral point has been permanently connected to ground. Before replacing the fuse, the following test should be done to check whether the surge arrester is short-circuited and needs replacement.

1. Disconnect the surge arrester by pulling out the cable lug (A).
2.

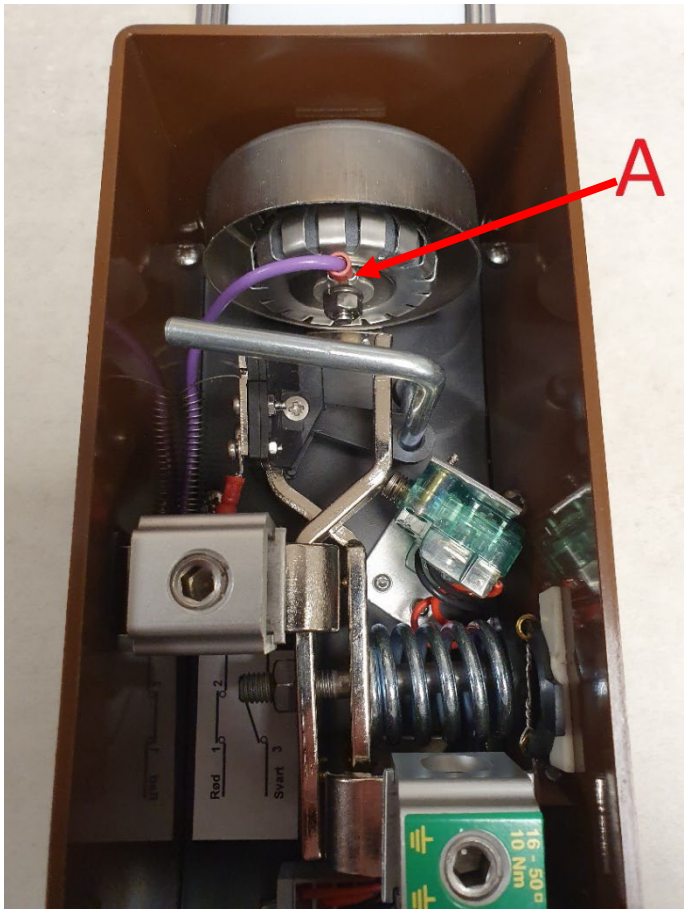

Sales/Development, Trondheim Østre Rosten 84G
NO-7075 Tiller
Phone: +47 976 74 000
www.el-tjeneste.no Mail: info@el-tjeneste.no

Factory/Warehouse, Steinkjer Jæktsmedgata 4
NO-7725 Steinkjer
Phone: +47 976 74 000
Mail: info@el-tjeneste.no

3. Measure if there is a short circuit between the surge arrester (B) and the neutral point (C). This should be done with a insulation measurement instrument with the following measurement voltages:

   NPS240 and NPS400 – 250V
   NPS690 and NPS1000 – 500V

   If higher measurement voltages are used a false fault-detection might occure.

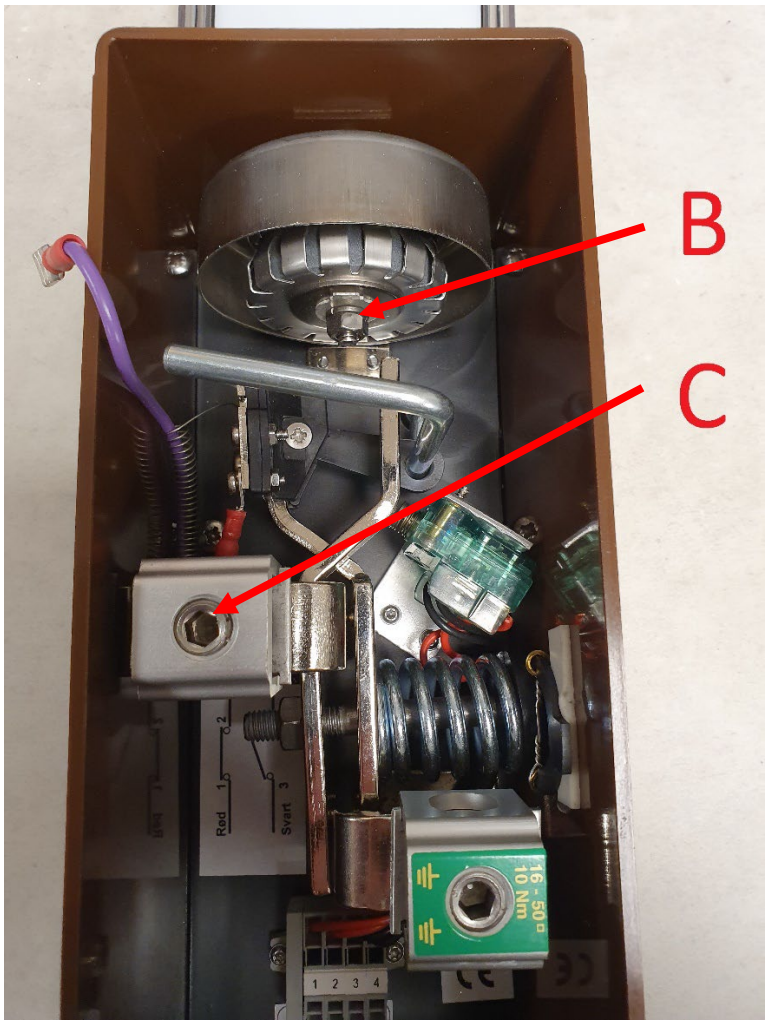

4. If the measurement shows a short circuit, the surge arrester must be replaced. This can be done by removing the mounting plate from the box and installing a new one (order numbers listed in chapter 2 – product overview).
   If the measurements shows no short circuit, the connection to the surge arrester can be reconnected and a new fuse to be installed.

Sales/Development, Trondheim Østre Rosten 84G
NO-7075 Tiller
Phone: +47 976 74 000
www.el-tjeneste.no Mail: info@el-tjeneste.no

Factory/Warehouse, Steinkjer Jæktsmedgata 4
NO-7725 Steinkjer
Phone: +47 976 74 000
Mail: info@el-tjeneste.no

6.2 CHANGING FUSE

1. Every Neutral Point Surge arrester (NPS) is delivered with a spare fuse (D).
   If necessary, a new one can be ordered (order nr. 2864752).

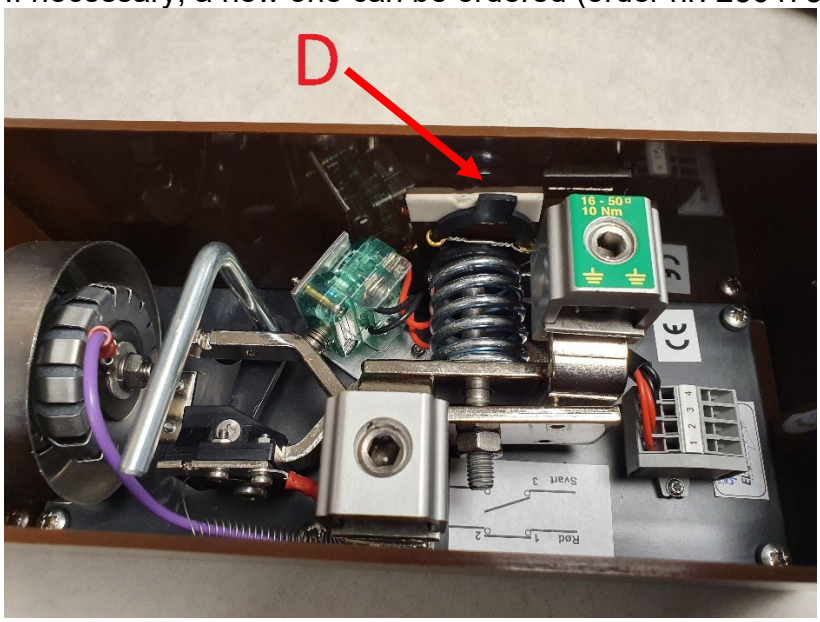

2. Slide the indicator release lever (F) in the direction of the yellow arrow. This makes it possible to place a new fuse in the fuse bracket (E).

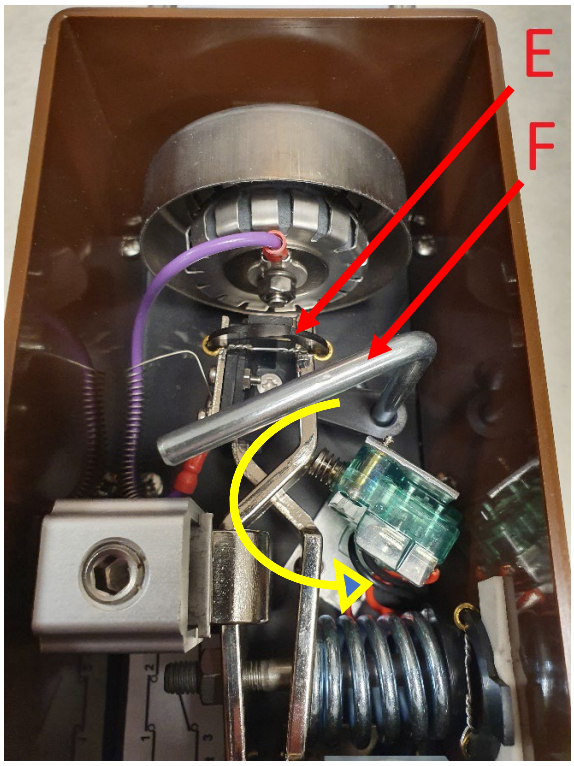

3. Remove residual fuse parts and put on the lid back on, the red color marking should now be gone.

Sales/Development, Trondheim Østre Rosten 84G
NO-7075 Tiller
Phone: +47 976 74 000
www.el-tjeneste.no Mail: info@el-tjeneste.no

Factory/Warehouse, Steinkjer Jæktsmedgata 4
NO-7725 Steinkjer
Phone: +47 976 74 000
Mail: info@el-tjeneste.no